Yoswit Smart Outlet Datasheet

Model: YO512eu (R2W)

Revised: 01-12-2024



Elevate Your Home with Intelligent Appliance Control

Yoswit Smart Outlet revolutionizes the way you interact with your devices. Real-time monitor the electricity usage for increased efficiency and enjoy enhanced safety with overload protection. Independent safety gate to prevent accidental touch by children or pets. Schedule devices effortlessly with built-in timer. and experience remote control before arrival and smart speaker integration via the built-in WiFi. Use it independently or as a smart gateway, seamlessly integrating with Yoswit's other smart products for a fully connected and intelligent home experience.

Connection:

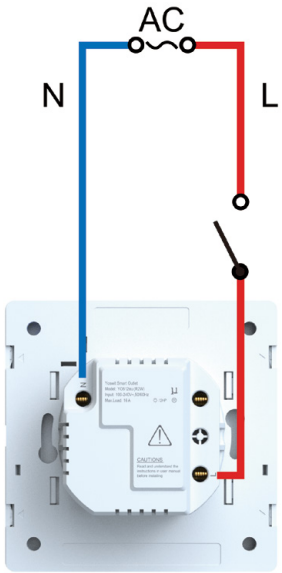

Key Features and Benefits

- Real-time Monitor the Electricity Usage
- Overload Protection
- Prevent Mistakenly Touching
- Schedule Devices Using Built-in Timer
- Outdoor Remote Control via Yoswit App
- Central Hub for Smart Devices
- Compatible with the Entire Family of Yoswit Products
- Bluetooth Mesh & Wifi Enhance Connectivity and Extend Range

Various Customized Products

We offer a comprehensive selection of smart home products that are seamlessly adapted to the usage standards and various socket types in different countries, ensuring a smooth installation process for all users. With extensive compatibility, our products enable you to control a diverse range of household appliances, including lighting, air conditioning, and TV.

Light Switch | Dimmer Switch | 2 Way Switch | Double Pole Switch | Gate Controlled Switch | Hidden Controlled Switch | Outlet | Roller | Curtain | Remote Control | Thermostat

Yoswit App

You can download our app to implement the following functions via Bluetooth and WiFi to control the Yoswit switches.



SCAN THE QR CODE TO DOWNLOAD
YOSWIT APP

Product Specifications

Color Option:

*You can also customize the colors



White

Specifications:

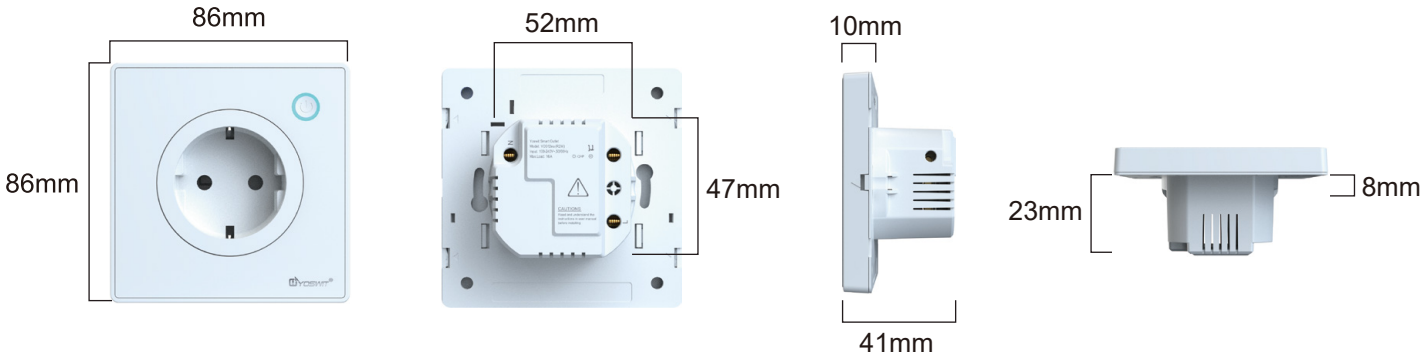

Electrical	
Operation Power	100-240V AC (50/60Hz)
Power Consumption	≤1W
Max. Load	13A / 1.5HP
Power Measurement Accuracy	±3%

Wireless	
Frequency	2.4GHz
Connection	Wifi 2.4G / BLE 4.2
Range	Open Area: >50m / Interior: 3-20m

General Specifications

Product Name	Yoswit Smart Outlet
Model	YO512eu (R2W)
Socket Type	Socket 86
EAN / UPC	EAN: 0765756498166 / UPC: 765756498166
Revision	V7.0
Compliance	CE, FCC, RoHS
Manufacturer	Designed by Yoswit in Hong Kong, China / Assembled in Guangdong, China
Warranty	Two Year Limited Warranty (*Details available on the Product Warranty and Limitations of this datasheet)

Mechanical

Operating Temperature	-10°C to 40°C
Operating Humidity	0-95% RH, Non-Condensing
Operating Environment	Interior
Operation	APP / Manual
Ingress Protection (IP)	20
Plug Type	EU

Product Package

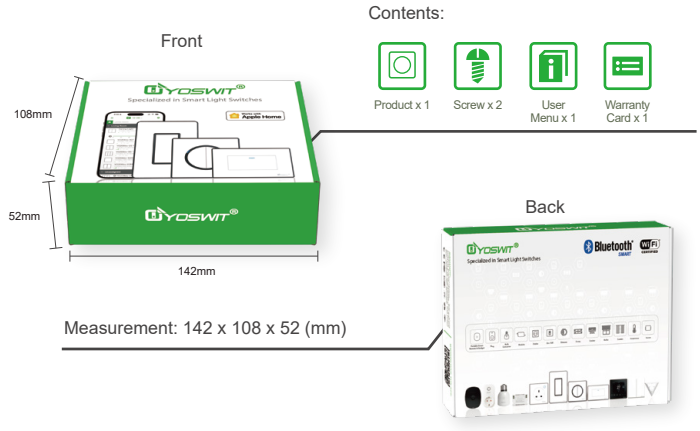

Outer Box



Quantity Per Box: 40 Pack / Box
Measurement: 58 x 31 x 23.5 (cm)

Product Warranty and Limitations

Yoswit brand products guarantee for a period of 2 years warranty from the date of purchase. During the warranty period and in the event that a defective product is identified (non-human factors), Yoswit will provide free maintenance. Damage beyond the warranty period or caused by improper use is not covered within the warranty, Yoswit will not bear any responsibility for repair, and will still provide users with a lifelong maintenance of paid services. If the products need to be repaired or returned to our company, an appropriate fee should be charged based on specific situation to cover the cost of replacement. Regardless of the warranty status, all shipping costs are borne by users.

LINCOGN TECHNOLOGY CO. LIMITED

Address: Room 202, 2/F, Building No. 19 West Science and Technology Avenue, Science Park, Shatin, N.T., Hong Kong
info@yoswit.com | Tel: (852) 3996 9396 | Fax: (852) 3119 8778 | www.yoswit.com